AY0080C63

JOHN DEERE		WET WEIGHT				5200 Lbs.
TANK RUN TIME	TANK CAPACITY	TANK PART #	LENGTH	WIDTH	HEIGHT	ADDITIONAL WEIGHT (EMPTY)
12 Hours	210 GAL	TA0000B54	114″	48″	18″	1300 LBS
24 Hours	420 GAL	TA0000B68	114″	48″	38″	1800 LBS

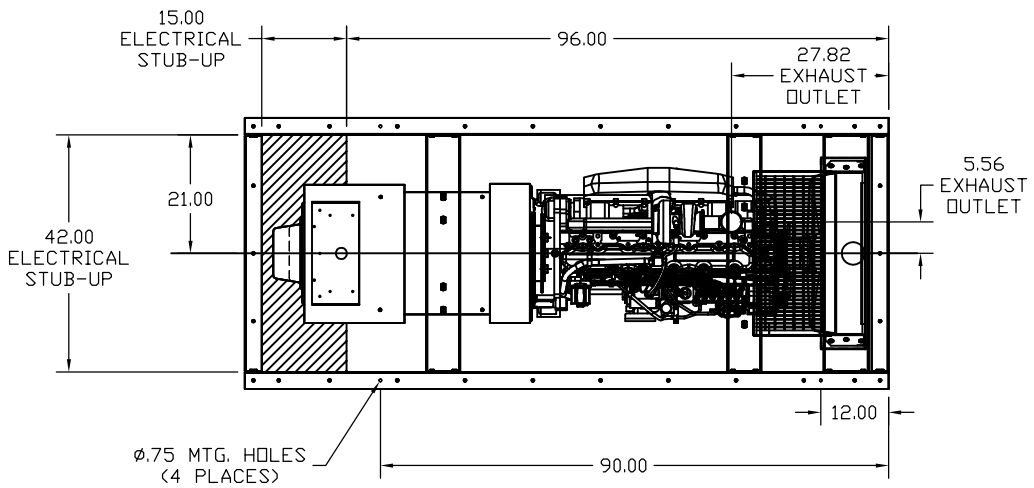

PLAN VIEW

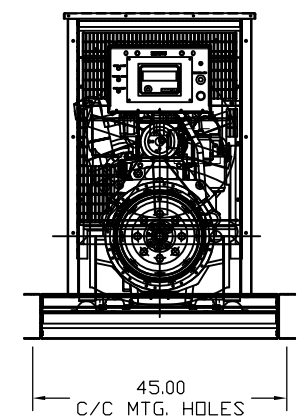

REAR VIEW

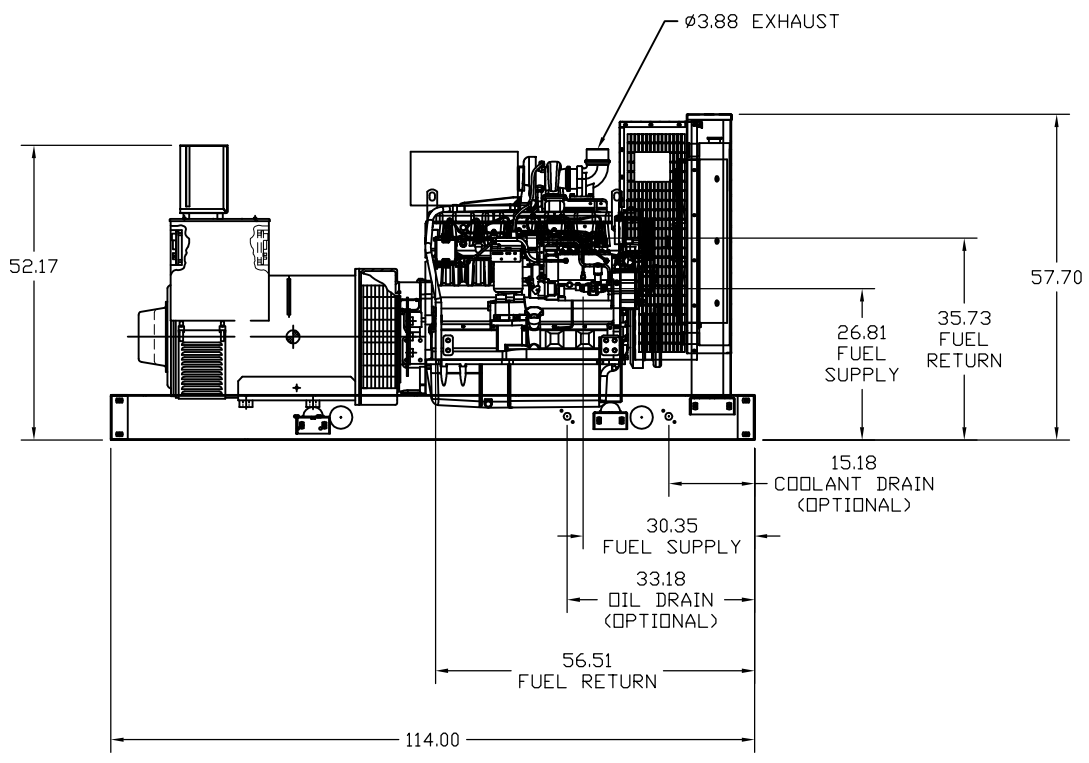

RIGHT VIEW

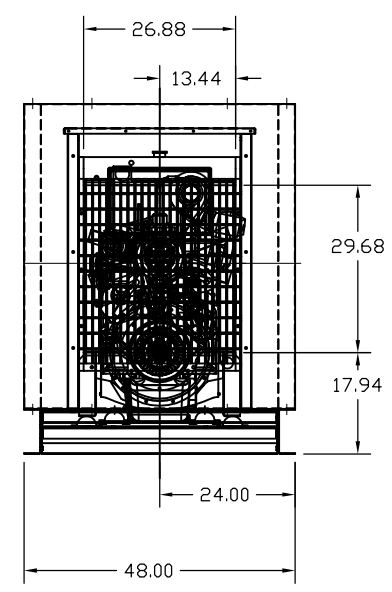

FRONT VIEW

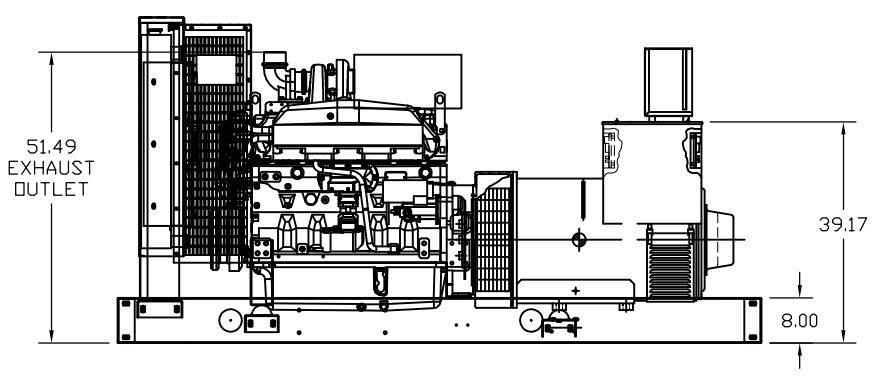

LEFT VIEW

REV. DESC: NEW		
REV. LTR: –	VERSION: 00	TDR: 000000339114
FILE: \PGA\00006\240	REVISED: 11:06:31 11/29/2004	BY: PGJOEE0
MTL: –		

BALDOR ELECTRIC Co.

IDLC200,JD,OPEN,STD

AY0080C63